Pneumatic tools on Mars?

Sending equipment to Mars is going to be expensive and could take several months if not 2 years to get replacement parts. It would be beneficial to the mission if astronauts could use existing materials and 3D printers to replace parts instead of waiting for them to come from Earth. Using the thin carbon dioxide atmosphere of Mars as a resource, NASA could use compressed air for storing energy and demonstrate that 3D printed parts can make the use of compressed air tools a better choice than battery powered tools because of longevity and repairability. This would save launch cost of replacement batteries and lost time waiting for the replacements.

Objective:

- **Design, build and test** an air powered motor that will demonstrate good power and replaceability if damaged or worn out

Demonstrate

- Make a rotating motor and tool that can drive a 3/8” bolt--4” long class 2A thread, using compressed air from a 12oz paintball tank at 80psi
- Or make a reciprocating tool that can cut through a 2” x 2”x 1/8” thick aluminum angle using a metal cutting blade and compressed air from 12 oz paintball tank at 80psi
- Motor body parts shall be 3D printed—choose your plastics
- You may use off-the-shelf nuts and bolts.
- You may use off the shelf gaskets and o-rings but its even better if you can print your gaskets and o-rings.
- You can use an off the shelf socket to attach to the bolt
- You can use an off the shelf metal cutting saw blade
- You can use off the shelf metal springs and metal ball bearings
- You can use off the shelf pneumatic connectors

If students can demonstrate pneumatic motors and applications with plastic 3D printed parts, NASA could do it with similar parts and capability with 3D printed aluminum parts on Mars.

This will test your CAD skills and your ability to use your 3D printing knowledge. Explore the print orientation and the print infill to make your parts stronger and more durable.





The problem:

Every tool, piece of equipment or material that is sent to Mars is an investment in the base/city that is being built. If the tool has a limited life time without repair and has a planned disposal time, that tool is less of an investment and more like a planned piece of trash.

- Most of the time solar panels send the electricity to be stored in batteries. This is a good storage system but as we all know from owning cell phones, the batteries eventually have a decreasing storage capacity due to the internal chemistry of the batteries. This can also be affected by the temperature changes and the number of cycles of charging and discharging.
- The weak point in the solar panels and batteries is the chemical battery. Batteries can not be built or repaired on Mars without a lot of other supplies being available. This means new batteries would have to be shipped to Mars when old ones fail. That could be a lot of mass.
- When on Mars, it would be valuable to use the local materials when possible—like the carbon dioxide atmosphere. **It's about 1/100th of our atmosphere but it is there.** So, another method might be to use some solar panels to power a motor that compresses the carbon dioxide air into a tank, then later use the compressed air for tools or maybe mobility. The advantage is that a storage tank will handle many cycles of use without loss of capacity over many years. This may be less efficient than storing electricity in a chemical battery but we would be gaining longevity of use. For example, I've had the same air compressor and tank for over 29 years but I've gone through **<u>many</u>** cellphones and batteries.
- Because pneumatic tools are mechanical, the parts can be made on Mars using 3D printers. Remaking batteries on Mars would be much more difficult and require mining and chemical processes that would be expensive to get to Mars.
- Since the atmosphere is very low humidity, the tank will not be collecting condensation and corroding (like here in Houston)—longer lasting tank.
- The weak point in the solar panels and the compressed air tank is the compressor and motor—how long do those last. Can we 3D print parts to replace the motors worn out pieces. (yes for many of the parts)













Here are some options.

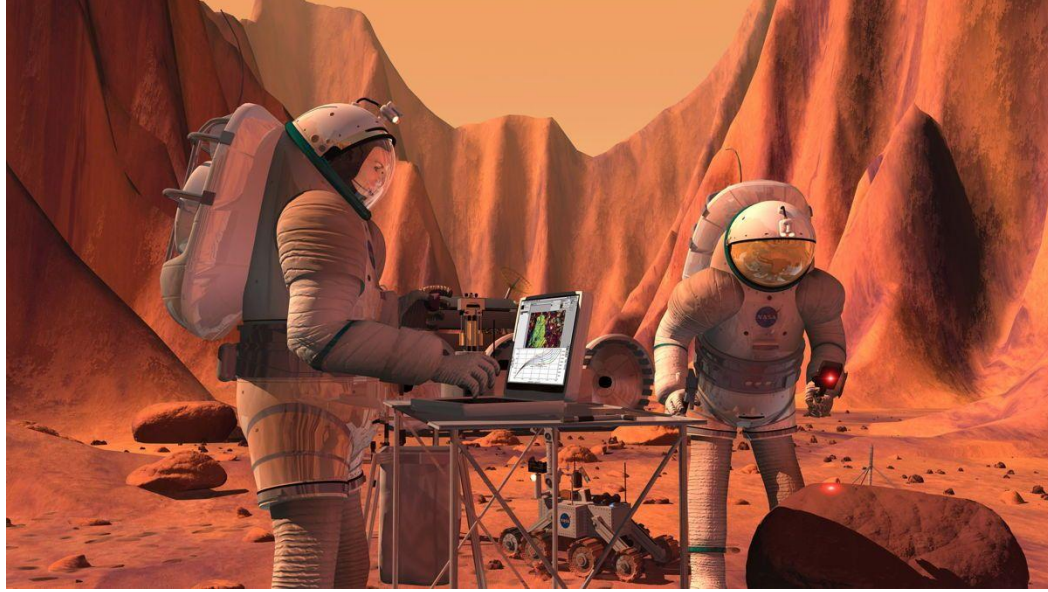

Making air turbine

- https://www.youtube.com/watch?v=zXEnXEfVBA8
- https://www.youtube.com/watch?v=Yg5swK_AnbU
- https://www.youtube.com/watch?v=RMUHxo2TOUk



Air turbine

Air powered Wankel engine

- https://www.youtube.com/watch?v=b399G61Z3fo&t=515s

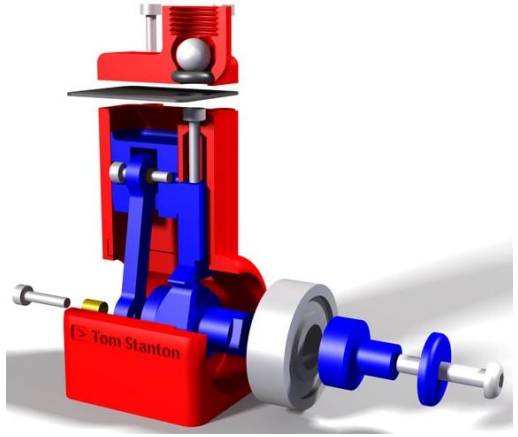

Piston driven

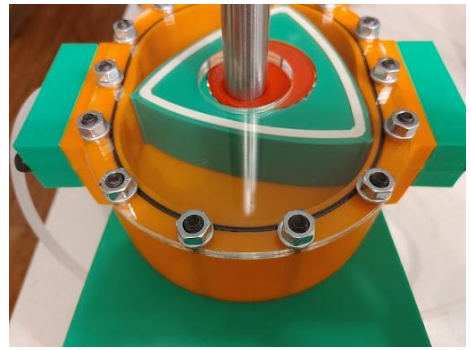

Wankel engine

Air powered piston engines

- https://www.youtube.com/watch?v=b399G61Z3fo&t=515s
- https://www.youtube.com/watch?v=cYF_D-4PhUU

Tesla turbine

- https://www.youtube.com/watch?v=Tynjk555cxk
- https://www.youtube.com/watch?v=DLKE_DbUdRg

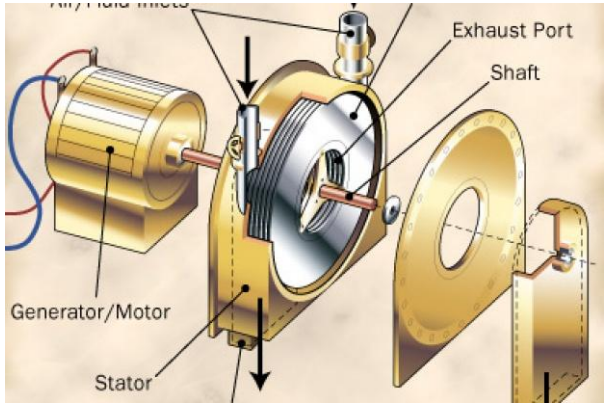

Tesla Turbine

Other possibilities are welcome

Existing pneumatic motors.

- You do not have to invent your own motor. There are many designs for 3D printed pneumatic motors.
- https://www.thingiverse.com/
- None of the motors are designed for your application but they can be printed from the files on Thingiverse and then you can alter the working design to fit your need.
- Do a search for one of the pneumatic motors you are interested in
  - Air turbine
  - Air powered wankel engine
  - Air powered piston engine
  - Tesla turbine
- Find one you think will work for your pneumatic tool and print one out and assemble it. Test it out. Using your CAD skills, you will need to alter the design to fit into your tool.
- Anything the original maker uses in their design, you can also use in your motor.
- There are many other 3D print websites that may have alternate designs. You are welcome to check them out also.
- You are designing a pneumatic wrench or saw for use while working outside on Mars. This means your tool will need to be big enough to be used with space gloves. Since most of you won't have space gloves, use welding gloves for your testing. They are not the same but they have a size similarity that will be useful.

Thingiverse
DARE TO BE HUMAN

Printables



Don't buy this. There is nothing wrong with the tank but it won't work for our needs. At 80psi there isn't enough volume in this tank to run your air tool. The purpose of this tank in the project was for measuring everyone against the each other. Now I need to come up with a slightly different measuring stick. You can still run the tool you are building using the shop air compressor you have at your school or home to test your tool. We will still use the same test rigs with a nut and bolt and an aluminum angle but now we will have to measure with time using another air source that may be a different volume for each school but the same pressure. (open to ideas)



Air tank

I don't have any reason to use this company's air tank except that it is cheap and certified. If you find another tank that is the same size and rated for this use, that will work fine. The point is that everyone is using the same size and capacity and it is safe for this kind of use. You don't have to purchase a new tank. It could be cheaper to buy a used one. I see that the Warrior brand has a gage on it but it makes it a little more expensive. I suggest filling it with air from a compressor. I don't see a need to fill with CO_2 for our activity. A regular shop compressor will fill it to about 100psi and that will be plenty for the 3D printed equipment you are building.

By driving the bolt or cutting the pipe with the allotted amount of air, you are demonstrating the efficiency of your tool. The more efficient it is at using air, the more work can be done with the stored air.

- Tipman 12 oz paintball CO_2 tank

- https://shop.gisportz.com/products/40012?variant=16462580711470&country=US&currency=USD&utm_medium=product_sync&utm_source=google&utm_content=sag_organic&utm_campaign=sag_organic&srsltid=AfmBOooSUoMf0xq3qn-hPOpeyDkgSQw3CDxEGyL4ZBvZKBj0-Rpjo1-xZtU&com_cvv=8fb3d522dc163aeadb66e08cd7450cbbdddc64c6cf2e8891f6d48747c6d56d2c

Reasons for the discussion
Batteries vs Compressed Air





Lithium Cell Structure

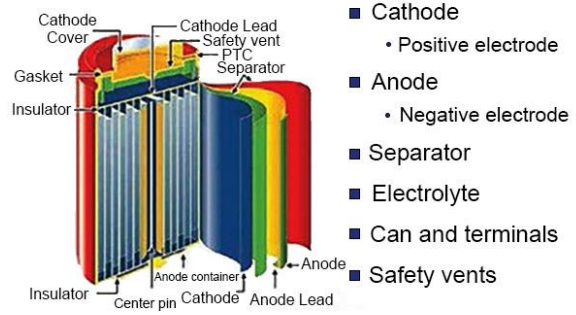

- Cathode
  - Positive electrode
- Anode
  - Negative electrode
- Separator
- Electrolyte
- Can and terminals
- Safety vents

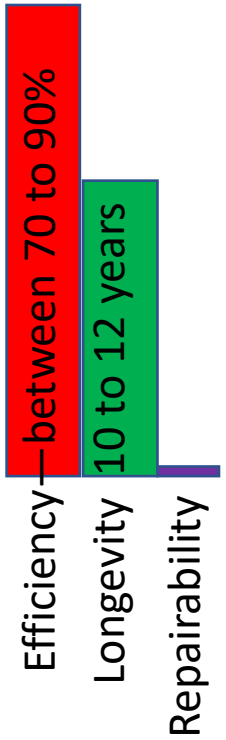

Lithium Batteries

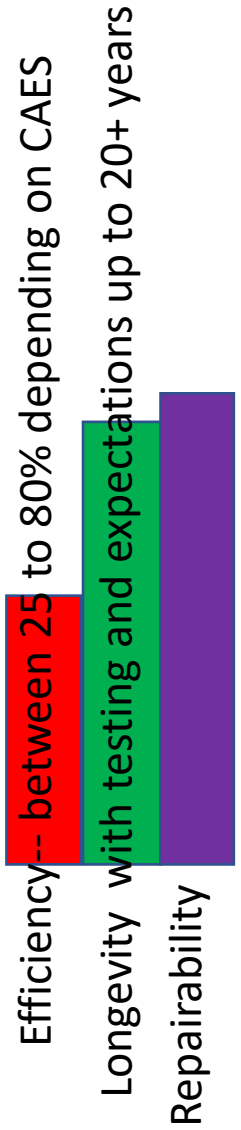

Compressed air tank and compressor?



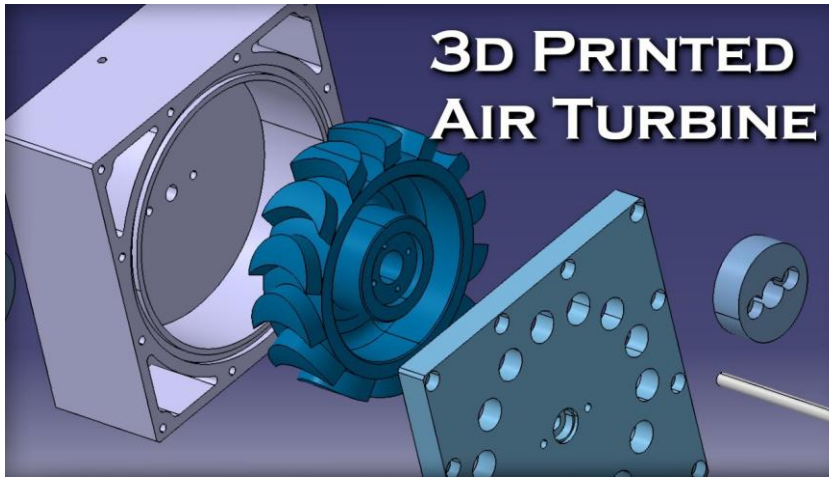





Pneumatic Tools

- If there is an electric tool, there is probably the same tool that is pneumatic.
- No sparks, smaller, safe in flammable areas, similar power/torque (sometimes more sometimes less)
- Air tools vs electric tools—this company makes both and helps you understand when and where you might want one over the other.
- https://ronixtools.com/en/blog/air-tools-vs-power-tools/#What_Are_Air_Tools
- Air tools 101:
- https://www.atlascopco.com/en-us/itba/expert-hub/articles/air-motors-101-a-comprehensive-guide

Size comparisons—drill vs drill







Test Materials

You don’t have to buy from McMaster –Carr, but make sure you get the same size and grade of nut and bolt with the same thread count.

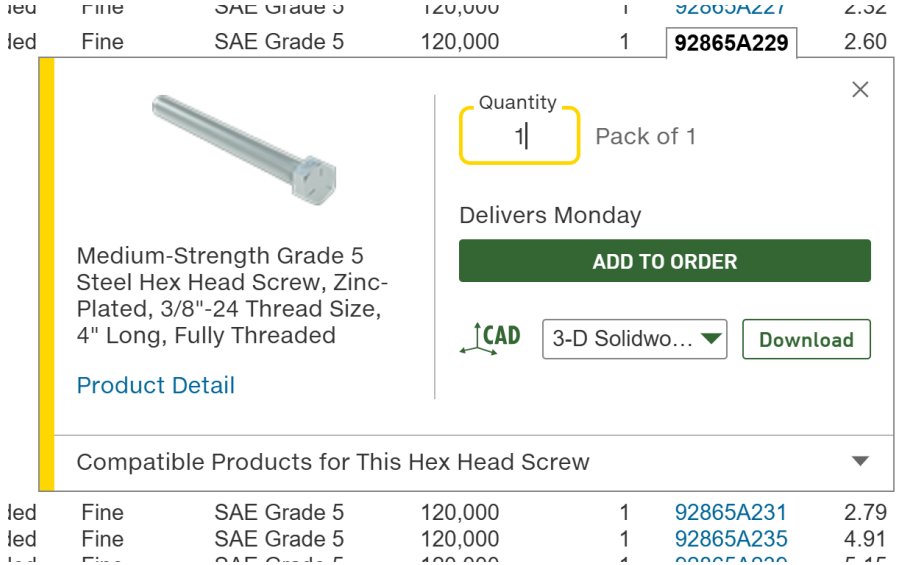

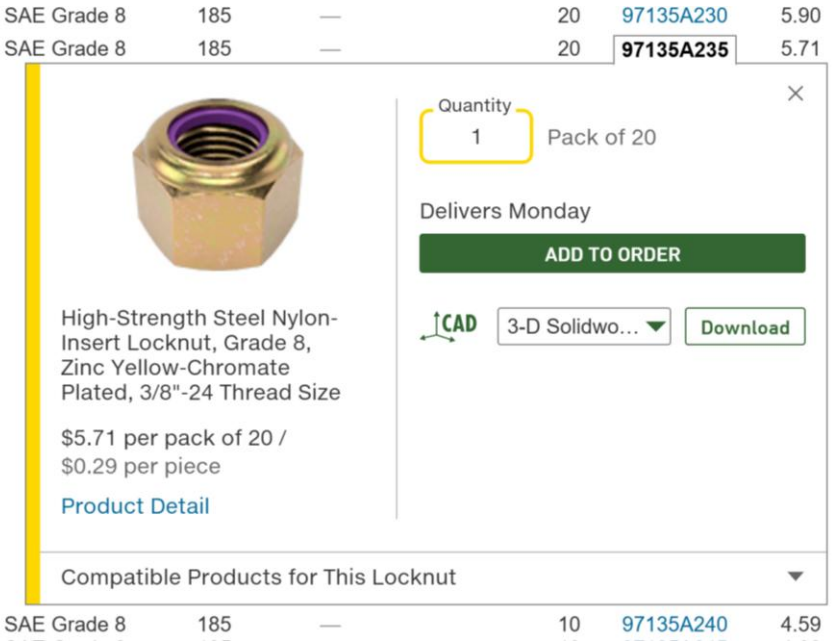

Testing hardware for bolt driver

The idea is that we need to have a running torque for the bolt so that your team's tool is having to do some real work to drive the bolt. We want to know how efficient your tool is with the air you are using and the time it takes to drive the bolt.

- Set your hex nut onto a board or 3D printed stand so it doesn't move.
- Use your motor and ~~12 oz bottle of~~ 80 psi air to drive the bolt into the nut.
- Count the number or rotations you are able to drive the bolt and time how long it takes. Use all of the air in your tank. **Take a video of your tool in action.**

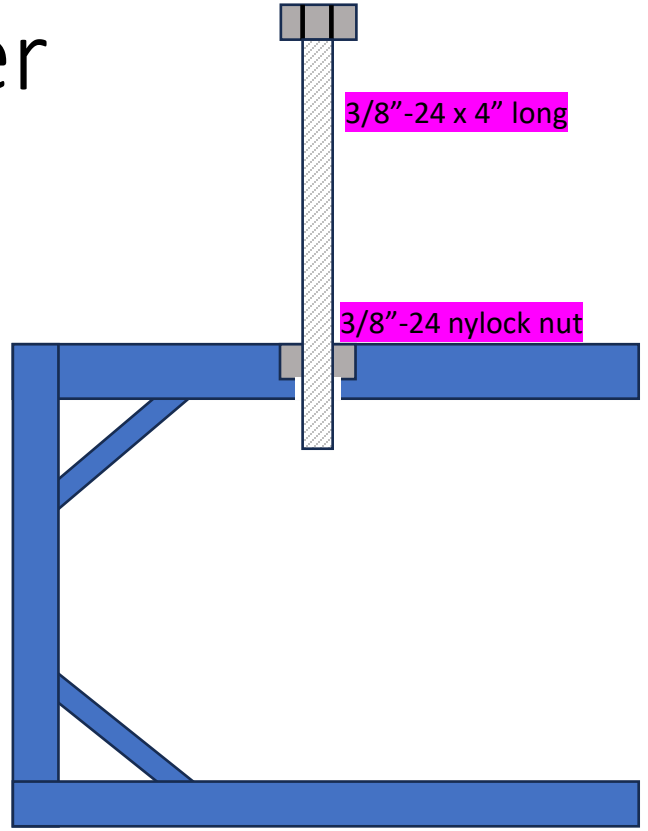

3 pieces of 1" plywood
2 metal brackets
4 drywall screws
Epoxy
Nyloc nut





A class 2A thread on the bolt and a class 2B nut is desired so that there is some resistance to driving the bolt into the nut. The nut was chosen to avoid galling between two similar steels.

For the build, I drilled a ½" hole in the center of one of the 1" plywood pieces and then drilled about half way through the hole with a 5/8" drill bit (not all the way so the nut could rest in the hole. Then I glued the lock nut in with epoxy around the edges. I attached 1 bracket to the top plywood pied and a second bracket to the bottom piece of plywood. Then I screwed the 3 pieces together. There was still some flex in the system so I used 1 5/8" drywall screws in the back to rigidize the whole thing.



Testing hardware for reciprocating cutter

- 2” x 2” x 1/8” aluminum angle
- https://www.homedepot.com/p/Everbilt-2-in-x-8-ft-1-8-in-Thick-Aluminum-Angle-6423/332735297
- If you already have some aluminum angle, you don’t need to buy this. Depending on the store you can get 2 ft or 4 ft lengths.
- I’m not advocating Home Depot, you can get it from whatever hardware or metal supplier is available. If you tell them it is for a high school project for NASA, you might be able to get it donated.



- You can choose the type of blade and how it is held in your reciprocating tool but it needs to have 18 teeth/inch.
- Hold your angle aluminum with a vise or similar device and cut the angle using your team’s tool with a hack saw blade with 18 teeth/in. Measure how far down you are able to cut through the aluminum using all the air in your tank. How long did it take to make the cut? **Video record your work.**
- Measure from the peak of the angle aluminum vertically down to get your cut distance
  - A sharp blade will cut straight, a dull blade will cut on a curve.

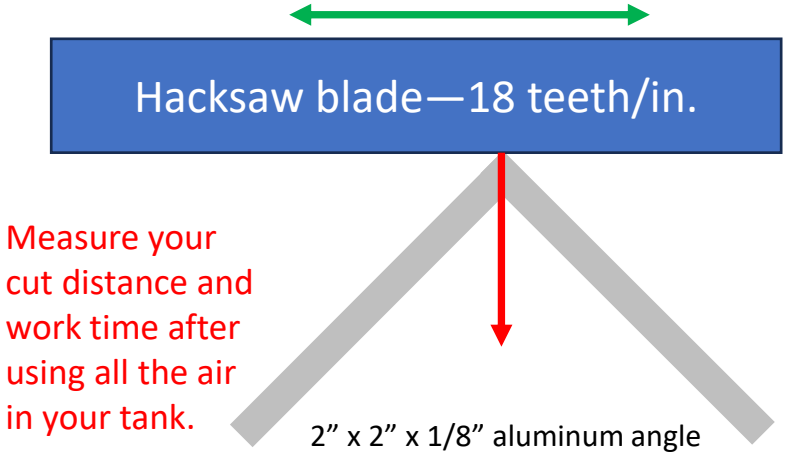



Air powered but not compressed air—just too cool



Compressed air trains used in mining operations to minimize chances of fires and explosions

Air Powered Trains

Pneumatic trains and even cars have been around for a very long time. When mining coal or other areas where natural gas may be a problem, air powered trains were necessary to prevent sparking a fire or explosion. Some would run at pressures of 1000 psi. There are some companies currently reexamining compressed air and approaching efficiencies similar to electric cars. Depending on how the electricity is generated to run the compressors, the cars could be zero emission vehicles.



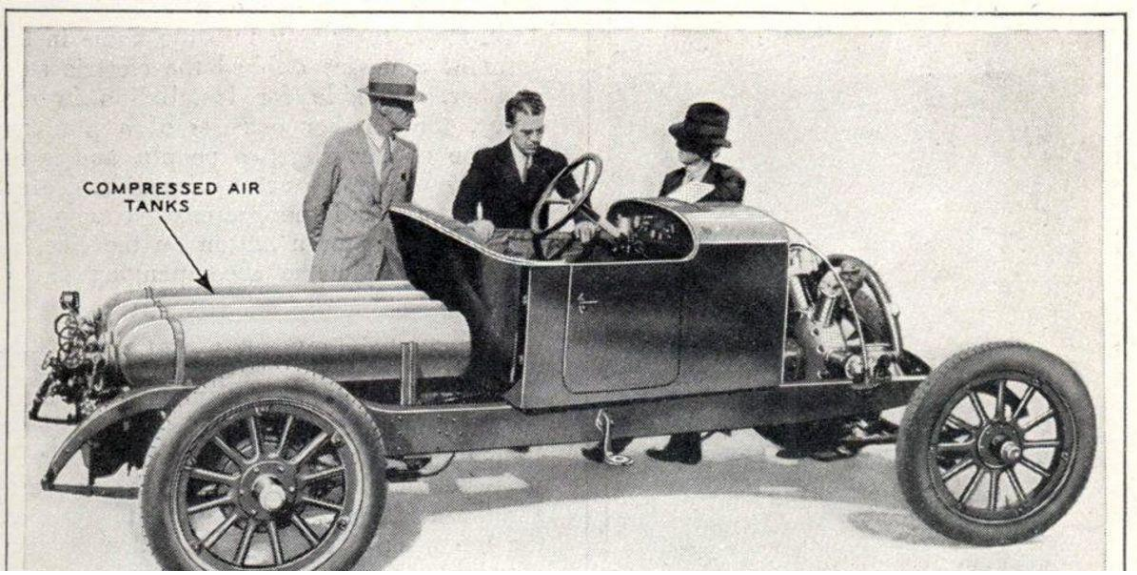

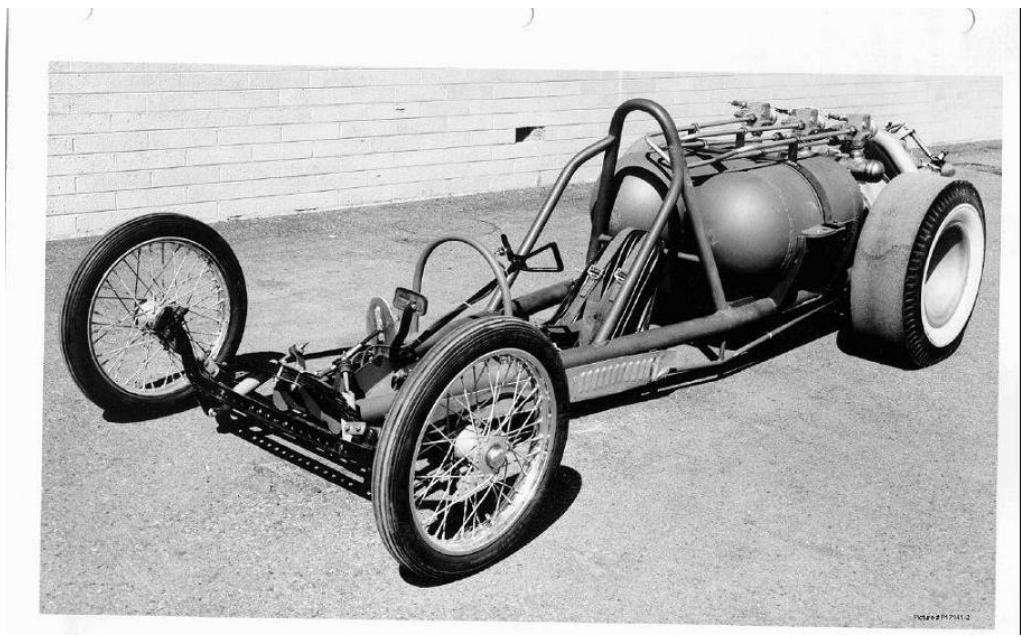

Compressed Air Powered Cars

https://www.youtube.com/watch?v=fFoYPj3Ntzc





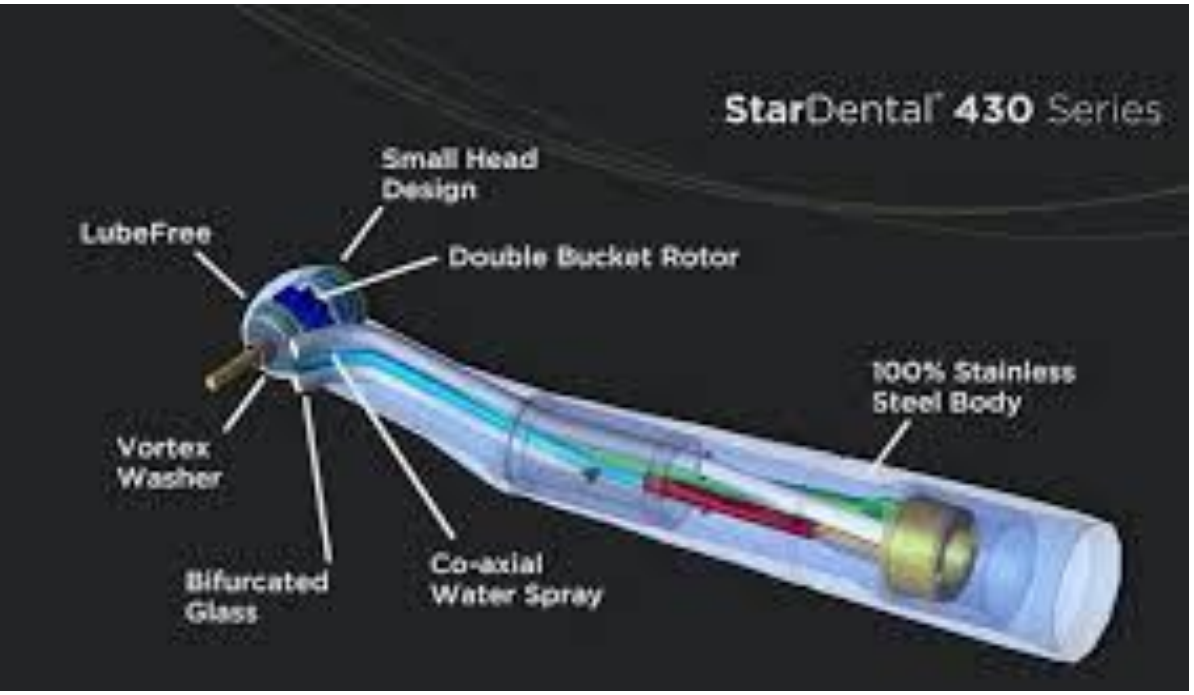

Pneumatic Dental Tools

Many dental tools are pneumatic because they are small and have high speeds.

